Stream-Flo ESD-EHX

Powered by SmartVue™ and PwrESD

Surface Safety Valve Monitoring System

ESD-EHX is a self-contained valve monitoring system powered by SmartVue™ intelligent valve controller (IVC). It integrates to surface safety valves to provide a variety of features for remote opening and closing, and partial stroke testing. The system is connected remotely through Modbus RTU protocol and locally through a human machine interface (HMI) screen and a Wi-Fi interface.

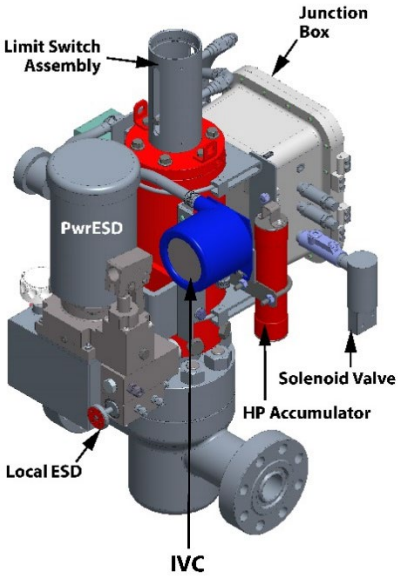

ESD-EHX Assembly in a Class 1 Division 1/Zone1 Environment

(a) (b)

Intelligent Valve Controller; (a) SmartVue™ SVX and (b) SmartVue™

Features and Benefits:

Intelligent Valve Controller (IVC)

ESD-EHX is powered by SmartVue™ for data acquisition, local user interface, and edge computing to run condition monitoring and autonomous operations. The controller can be offered as an explosion-proof/flameproof Class 1 Division 1/Zone 1 or Class 1 Division 2/Zone 2 solution.

Electro-hydraulic Power Pack (PwrESD)

ESD-EHX integrates with Stream-Flo's PwrESD compact electro-hydraulic power (EHP) system for local or remote operation. It offers a range of flow rates and hydraulic operating pressures using AC or DC powered electric motors. The hydraulic circuit is self-contained with safety features including relief valves, fusible element, and manual ESD valve.

Condition Monitoring

ESD-EHX includes several condition monitoring features capable of evaluating the system health and identifying potential faults. It offers local and remote diagnostics during four main operational events; opening, opened, closing, and closed states. It is also capable of conducting partial stroke testing (PST) diagnostics to evaluate the valve and actuator health. Moreover, diagnostic logic is used to identify sensor limits/faults and hydraulic fluid leakage.

Automatic Control

ESD-EHX can autonomously conduct ESD events using built-in logic algorithms. This includes line pressure variation, hydraulic pressure leakage, abnormal sensor readings, increased valve drag, and low hydraulic fluid. In addition, the system can automatically cycle the pump to maintain hydraulic actuator pressure.

User Interface and Connectivity

ESD-EHX can be configured with three types of user interface; (1) local screen, (2) remote wired, and (3) local Wi-Fi. The remote wired data connections can be made to the controller's Modbus serial (RTU or ASCII) server. A local Wi-Fi connection provides webpage user interface access.

Class 1 Division 1/Zone 1

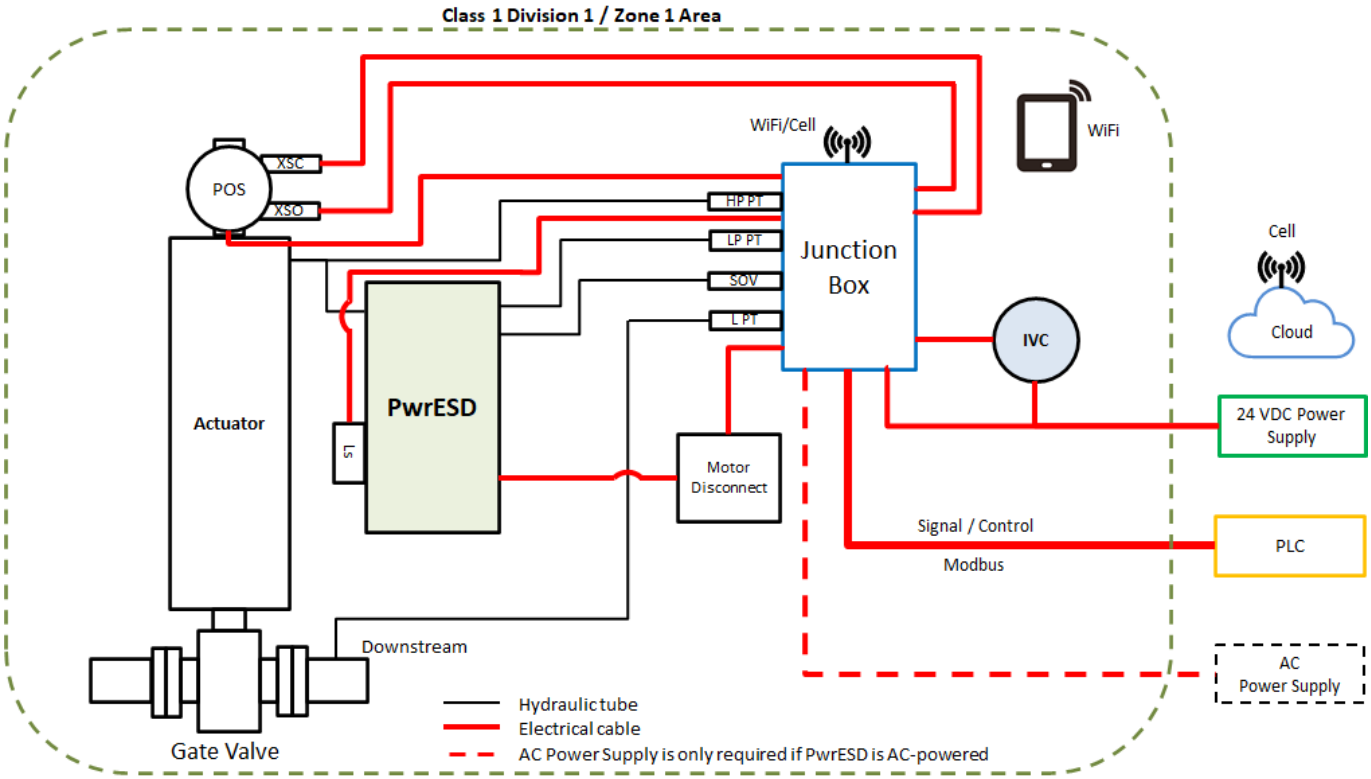

Class 1 Division 2/Zone 2

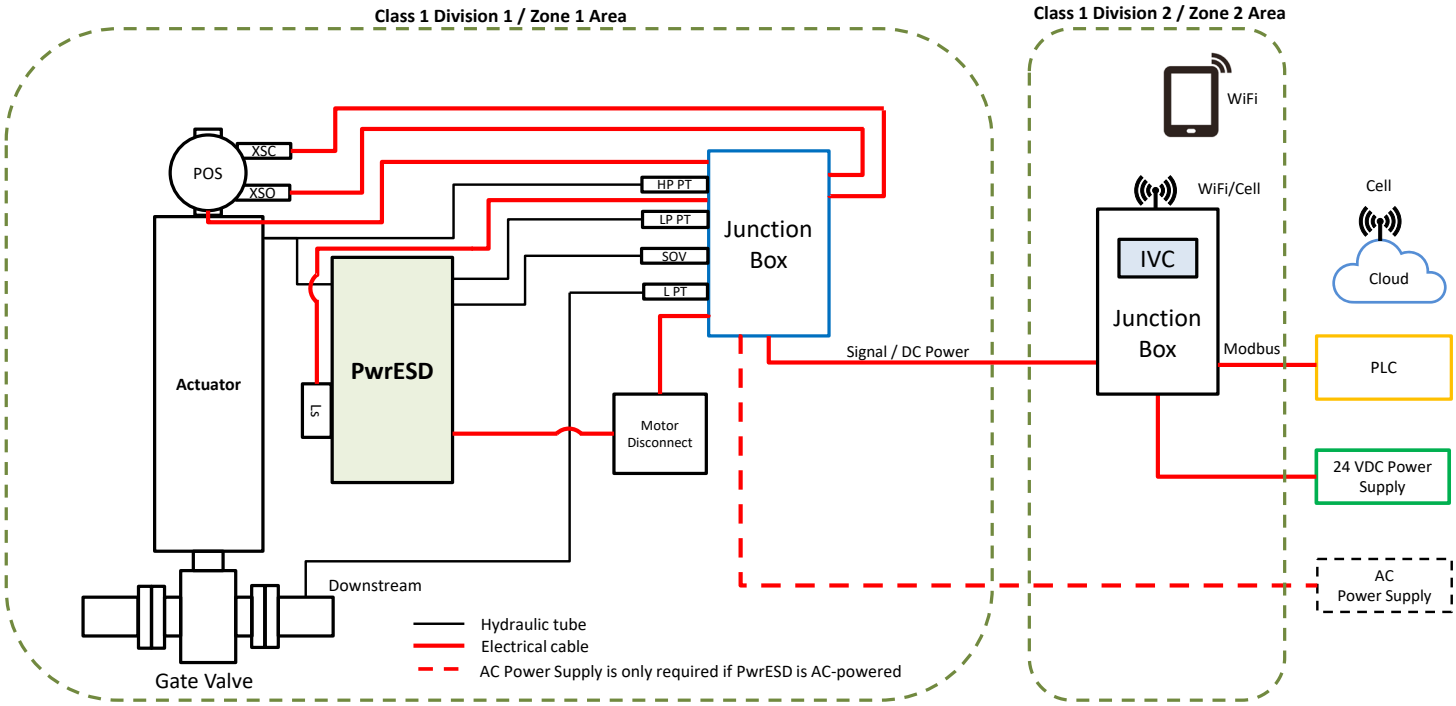

Product Configurations

ESD-EHX

Feature	Description
User Control	Local and remote reset/trip
Automatic Control	ESD fire trip
Valve Controller	Class 1 Division 1/Zone1 or Class 1 Division 2/Zone2
Power Unit	PwrESD
Control Elements	Low-pressure (LP) solenoid valve and electric motor relay
Sensors	High-pressure (HP) pressure switch
Connectivity	Local screen and remote wired

ESD-EHX-CM

Includes all ESD-EHX features, plus:

Feature	Description
Condition Monitoring	Opening and closing event diagnostics, auto pump diagnostics, sensor limits and faults, communication faults, and electronic Hi/Lo pilot
Automatic Control	ESD on electronic pilot, sensor limits and faults, and opening time-out. Auto pump cycling and electric pump time-out.
Sensors	LP and HP pressure transmitters, downstream line pressure transmitter, and limit switches.

ESD-EHX-CMX

Includes all ESD-EHX-CM features, plus:

Feature	Description
User Control	Local and remote partial stroke testing (PST)
Condition Monitoring	PST diagnostics and hydraulic circuit leakage detection
Automatic Control	ESD on hydraulic circuit leakage and low hydraulic fluid
Sensors	Position transmitter, temperature transmitter, and level switch
Connectivity	Local Wi-Fi interface

Options

Available for any of the above product configurations.

Feature	Description
Motor disconnect switch	Manually turns off power to electric motor
Quick exhaust valve	Reduces tripping time during an ESD event
HP Accumulator	Limits electric pump cycling due to ambient temperature fluctuations
Cloud Interface	Display real-time data and control SSV remotely using a cell/cloud interface

Specifications

Class 1 Division 1/Zone 1 Intelligent Valve Controller (IVC)

Processor	32-bit microprocessor
Display	LCD display with 4 button touch interface
Input power range	10 - 30 VDC
Power consumption	< 2.5W
Operating temperature range	-40°F to +140°F (-40°C to +60°C)
Hazardous area approvals	CSA/FM Class 1 Division 1 Groups C, D ATEX/IEC Ex d IIB Gb

Class 1 Division 2/Zone 2 Intelligent Valve Controller (IVC)

Processor	32-bit microprocessor
Display	¼ VGA color LCD daylight viewable with LED backlighting
Input power range	10 - 30 VDC
Power consumption	< 1A (no load), < 1.5A (max load)
Operating temperature range	-40°F to +158°F (-40°C to +70°C)
Hazardous area approvals	CSA/UL Class 1 Division 2 Groups C, D

PwrESD Electro-Hydraulic Power Unit

Electric Motor	115/230 VAC single-phase or 24 VDC Power options: ¼, ⅓, ½, or ¾ HP (0.18, 0.25, 0.37, or 0.56 kW)
Motor-Operated Pump	Micro gear pump Displacement: 0.006 to 0.092 in^3/rev (0.1 to 1.5 cm^3/rev) Flow rate: 0.036 to 0.344 gpm (0.14 to 1.30 l/min)
Manual Pump	Plunger pump Displacement: 0.66 to 1.18 in^3/stroke (10.8 to 19.3 cm3/stroke)
Reservoir Size	150 and 300 in^3 (2.5 to 4.9 liters) 500 in^3 (8.2 liters)
Hydraulic Fluid	Industrial hydraulic fluid up to -40 °F (-40 °C) ambient temperature
Operating Pressure	2000 psi (13,790 kPa) 3500 psi (24,132 kPa)
Safety	Pressure relief valves, fusible element, and manual ESD valve
Operating temperature range	CSA/UL -40°F to +104°F (-40°C to +40°C) ATEX/IEC Ex -4°F to +140°F (-20°C to +60°C)
Hazardous area approvals	CSA/UL Class 1 Division 1, Groups C, D ATEX/IEC Ex db IIB T4 Gb

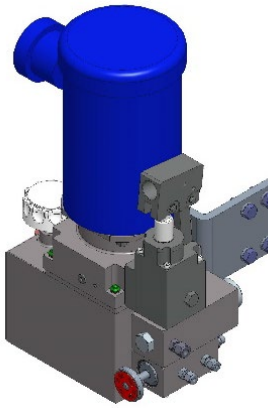

Solenoid Valve

Power Consumption	0.85 watts
Operating temperature range	-76°F to +122°F (-60°C to +50°C)
Number of ports	3/2
Operating pressure	0 to 174 psi (0 to 1,200 kPa)
Hazardous area approvals	CSA/UL Class 1 Division 1, Groups B, C, D ATEX/IEC Ex d IIC

Position Transmitter

Measurement Type	Non-contact (Hall-effect)
Input Voltage	10-30 VDC
Output	4-20 mA
Operating temperature range	-40°F to +185°F (-40°C to +85°C)
Hazardous area approvals	CSA/FM Class 1 Division 1, Groups B, C, D ATEX/IEC Ex d IIB+H2

Limit Switches

Measurement Type	Non-contact (Magnetic)
Contact Arrangement/Material	SPDT (Form C) Tungsten
Operating temperature range	CSA/UL -40°F to +221°F (-40°C to +105°C) ATEX/IEC Ex -4°F to +158°F (-20°C to +70°C)
Hazardous area approvals	CSA/UL Class 1 Division 1, Groups A, B, C, D ATEX/IEC Ex d IIC

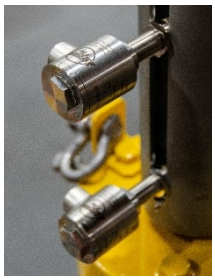

Pressure Transmitters

Input voltage	10-30 VDC
Output	4-20 mA
Operating temperature range (Medium)	-40°F to +212°F (-40°C to +100°C)
Operating temperature range (Ambient)	-40°F to +221°F (-40°C to +105°C)
Hydraulic low-pressure range	0 to 200 psi (0 to 1,379 kPa)
Hydraulic high-pressure range	0 to 5,000 psi (0 to 34,474 kPa)
Line pressure range	0 to 15,000 psi (0 to 103,421 kPa)
Hazardous area approvals	CSA/FM Class 1 Division 1, Groups A, B, C, D ATEX/IEC Ex d IIC T6…T1 Gb

Junction Box

Features	Motor contactor, terminal blocks, ground bar, RTD converter, and drain breather
Temperature Sensor	RTD probe
Operating temperature range	-40°F to +176°F (-40°C to +80°C)
Hazardous area approvals	CSA/UL Class 1 Division 1, Groups A, B, C, D ATEX/IEC Ex d IIB+H2

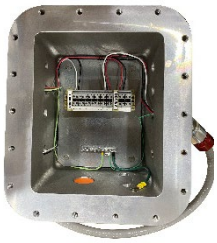

Level Switch

Measurement/Switch Type	Non-contact (Magnetic) Reed switch
Contact Arrangement/Material	SPDT (Form C) Rhodium
Wire Termination	Wireable connection head with 360° full rotation and removable terminal block
Operating temperature range	-40°F to +212°F (-40°C to +100°C)
Hazardous area approvals	CSA/UL Class 1 Division 1, Groups A, B, C, D ATEX/IEC Ex db IIB+H2 Gb

Stream-Flo Industries Head Office and Manufacturing Facility

4505 74 Avenue
Edmonton, Alberta, Canada T6B 2H5
Tel: 780.468.6789 | Fax: 780.469.7724

Stream-Flo USA Head Office

8726 Fallbrook Drive
Houston, Texas, USA 77064
Tel: 832.912.1022 | Fax: 281.653.1188

Stream-Flo International Hub

Stream-Flo Middle East DMCC
Unit 2404, Swiss Tower, Jumeirah Lakes Towers,
Sheikh Zayed Road, PO Box: 2562
Dubai, UAE

Follow us on:

For more information:

streamflo.com
info@streamflo.com

The Stream-Flo Group of Companies